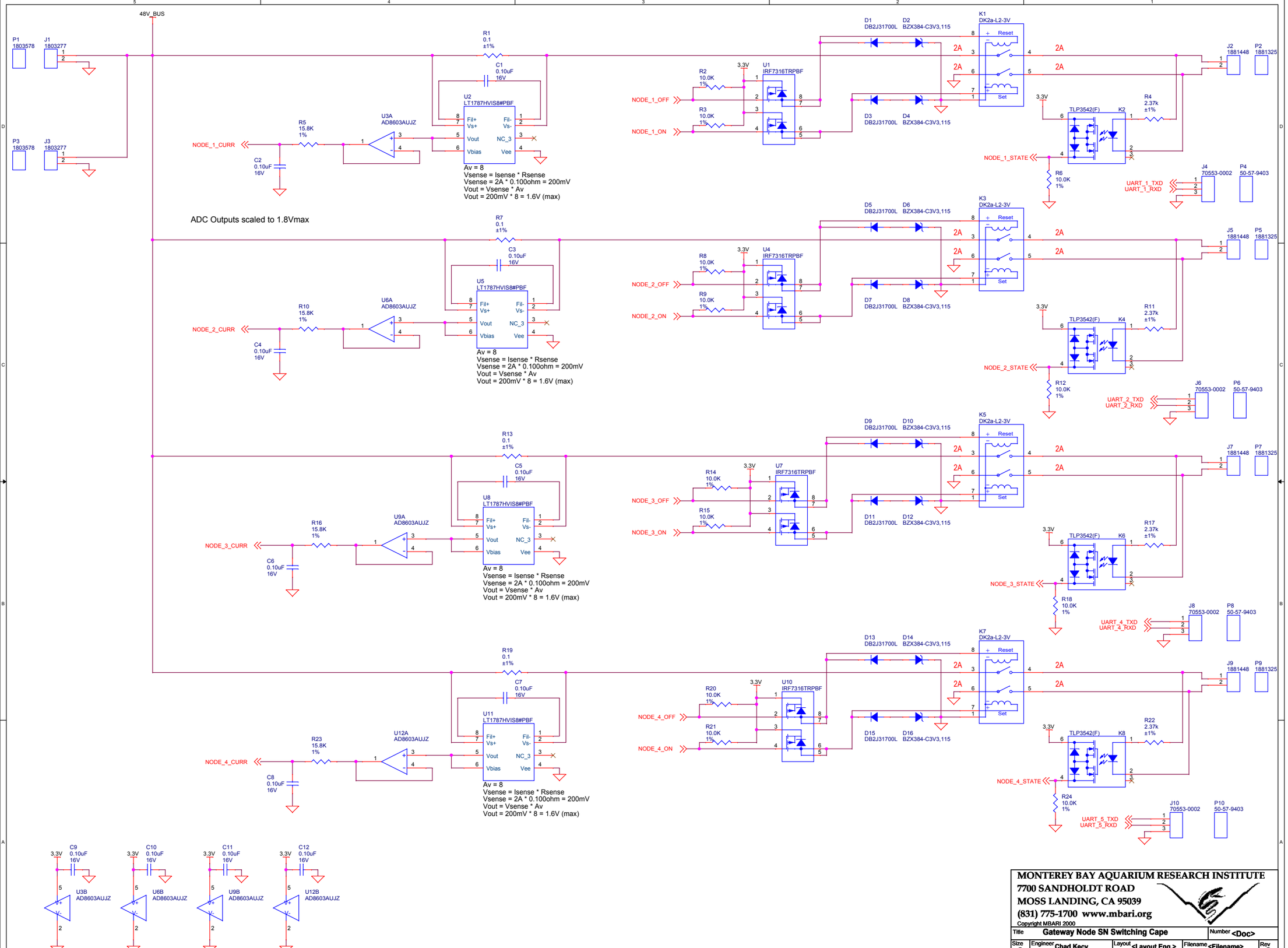

MONTEREY BAY AQUARIUM RESEARCH INSTITUTE
7700 SANDHOLDT ROAD
MOSS LANDING, CA 95039
(831) 775-1700 www.mbari.org

Copyright MBARI 2000

Title: Gateway Node SN Switching Cape			Number: <Doc>
Size: C	Engineer: Chad Kecy	Layout: <Layout Eng.>	Filename: <Filename>	Rev: C
	Date: Monday, June 23, 2014	Sheet 1 of 1	

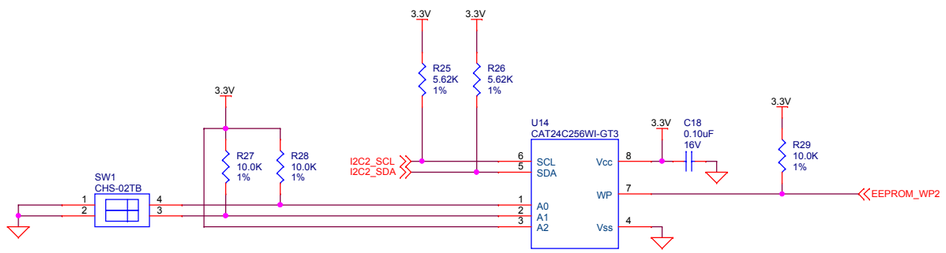

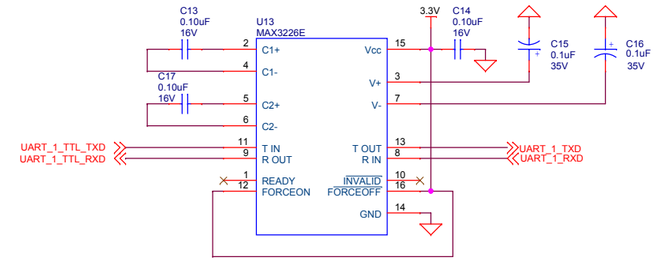

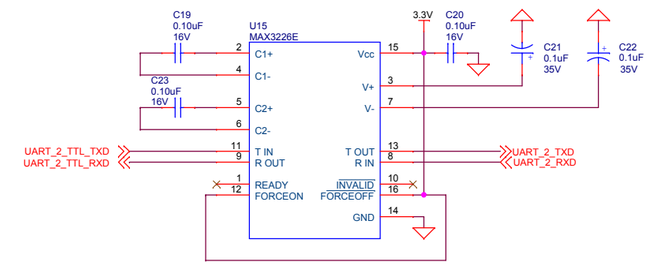

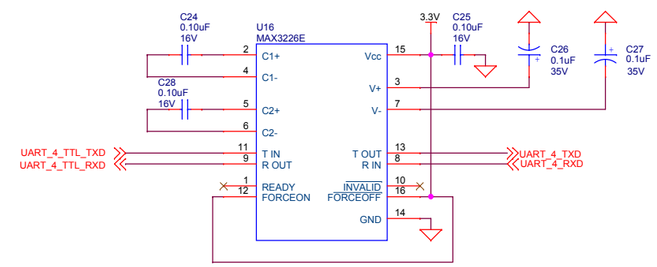

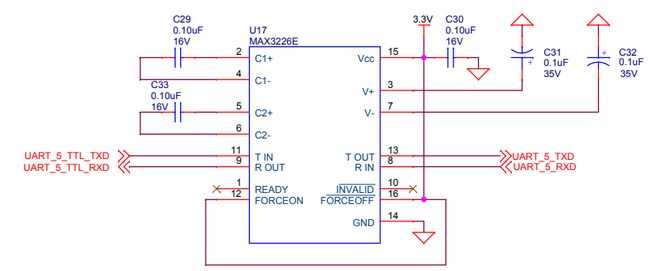

MONTEREY BAY AQUARIUM RESEARCH INSTITUTE
7700 SANDHOLDT ROAD
MOSS LANDING, CA 95039
(831) 775-1700 www.mbari.org
Copyright MBARI 2000

Title: Gateway Node SN Switching Cape				Number: <Doc>
Size: C	Engineer: Chad Kecy	Layout: <Layout Eng.>	Filename: <Filename>	Rev: C
	Date: Monday, June 23, 2014		Sheet 2 of 2	

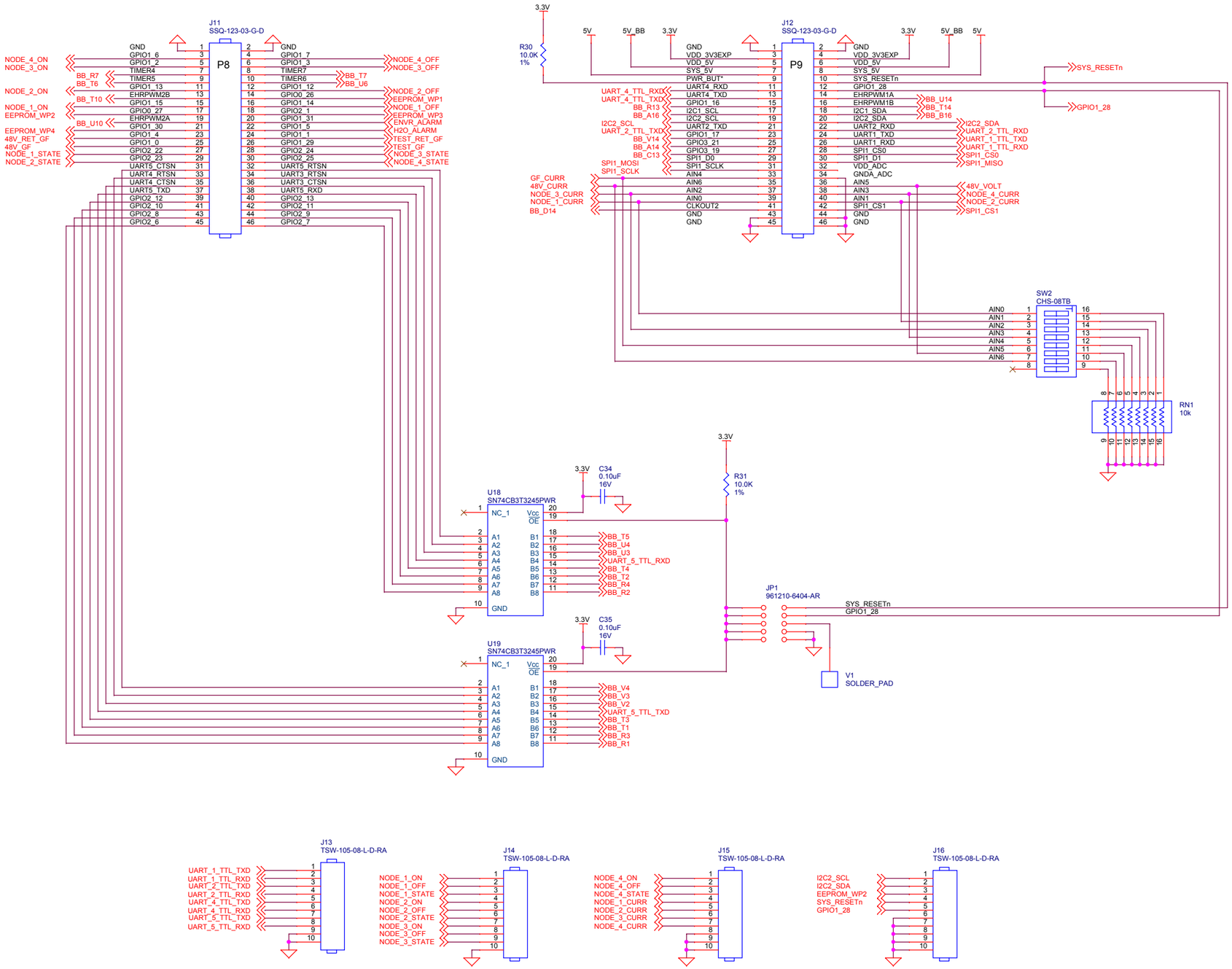

MONTEREY BAY AQUARIUM RESEARCH INSTITUTE
7700 SANDHOLDT ROAD
MOSS LANDING, CA 95039
(831) 775-1700 www.mbari.org

Copyright MBARI 2000

Title: Gateway Node SN Switching Cape			Number: <Doc>
Size: C	Engineer: Chad Kecy	Layout: <Layout Eng.>	Filename: <Filename>	Rev: C
	Date: Monday, June 23, 2014	Sheet 3 of 3	